TENNSMITH

CHANGING THE SHAPE OF METAL ®

Model HB121-16 Shown

MODELS HB73-16 HB97-18 HB97-16 HB97-12 HB121-18 HB121-16 HB121-14 HB145-18

OPERATION, PARTS & MAINTENANCE MANUAL

Model:	**Purchased From:**
Serial #:	**Date Received:**

USA MADE

6926 Smithville Hwy., McMinnville, TN 37110
931-934-2211 / Fax: 931-934-2220
www.tennsmith.com

FOREWORD

This manual has been prepared for the owner and operators of Tennsmith floor model hand brakes. Its purpose, aside from operations instructions, is to promote safety through the use of accepted operating procedures. Read all instructions thoroughly before operating the brake.

Also contained in this manual is the parts list for your brake. It is recommended that only Tennsmith or factory authorized parts be used as replacements.

3-YEAR LIMITED WARRANTY

TENNSMITH machinery and component parts are carefully inspected at various stages of production and are tested and inspected prior to shipment. We agree that for a period of twelve (12) months from the date of delivery from our authorized distributor to replace, at our option, any machine (or component part thereof) proving defective within the above period. Additionally, we agree that for a period of thirty-six (36) months from date of delivery to replace component parts proving defective within the stated period. All warranty claims are made F.O.B. our plant, providing such machine (or component part) is returned freight prepaid to our plant, or a designated service center of the undersigned, for our examination. This warranty does not include repair or replacement required because of misuse, abuse, or because of normal wear and tear; or electrical components which are warranty by their manufacturer. Further, we cannot be responsible for the cost of repairs made or attempted outside our factory or designated service center without our authorization. No claims for defects will be honored if the name and data place has been removed. This warranty is made expressly in place of all other warranties or guarantees express or implied, with respect to fitness, merchantability, quality or operative ness. This warranty becomes effective only when the accompanying warranty card is fully and properly filled out returned to the factory within ten (10) days from date of delivery.

SAFETY INSTRUCTIONS

1. Know the safety and operating instructions contained in this brochure. Become familiar with and understand the limitations of this machine. Always practice safety.
2. Wear approved eye safety protection such as glasses, goggles, etc., when operating the brake to protect your eyes.
3. Wear protective foot wear or safety shoes.
4. Keep your hands clear of the nose bar and clamping area of the brake. Keep hands clear of the apron area of the brake when making bends.
5. When bending capacity material use your legs and arms for making the bend, similar to lifting a heavy object, to avoid back strain. Maximum length and capacity material is a two person job. Adjust the counterweights to provide maximum assistance on heavy bends.
6. Never use a pipe or bar on the clamp handles or apron handles for additional leverage.
7. Do not push or pull on the counterweights during the bending process. The counterweights intended purpose is to reduce the force required the lift the apron.
8. Keep clear of the counterweight and apron swing area while operating the brake.
9. Keep the work area around the brake clear and clean to avoid slipping or tripping.

SAFETY LABELS

Do not operate the hand brake without the proper safety labels in place. If your machine is missing the following labels please contact Tennsmith Inc. or your authorized Tennsmith distributor to order.

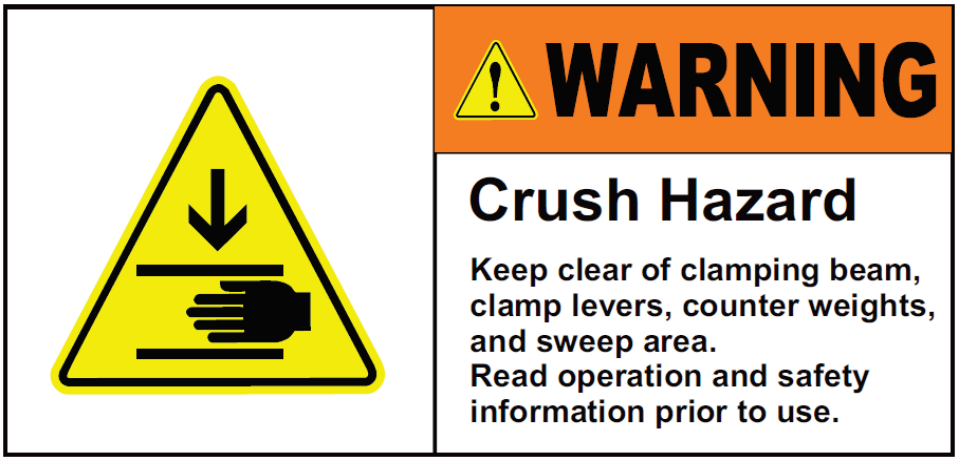

RECEIVING THE BRAKE

Upon receipt, closely examine the brake for damage during shipment. Be certain that you have two each clamp handles, counterweights and counterweight rods. Any loss or damage should be reported to the delivering carrier and to your distributor. Concealed damage should be reported to the delivering carrier immediately to protect your rights to make a claim.

USE CAUTION IN HANDLING AND MOVING THIS BRAKE. It is best to push or pull the brake only from the ends as it is top heavy. Approximate weights for the respective models are as follows:

HB73-16	1,200lbs	HB97-18	1,385lbs	HB97-16	1,675lbs
HB97-12	2,800lbs	HB121-18	2,300lbs	HB121-16	2,875lbs
HB121-14	3,250lbs	HB145-18	3,400lbs		

INSTALLING THE BRAKE

Locate the brake in a well lighted area on a solid level floor. Be certain that you have adequate clearance to swing the apron.

NOTE: THE BRAKE SHOULD BE REMOVED FROM THE SHIPPING SKID. Use lag screws or bolts with expandable shields or similar holding devices through the mounting feet on the bottom of the leg assemblies to bolt the brake to the floor.

Place an accurate machinist's level on top of the clamp block on the base assembly. Using the leveling screws (33), to level the brake front to back and left to right. If necessary, use metal shims (not provided) under the leveling screws to obtain proper elevation. When the brake is leveled, tighten the leveling screw nuts and mounting bolts to secure the brake in place. **THE BRAKE WILL NOT BEND PROPERLY IF IT IS NOT LEVEL.** Install the counterweights, rods and clamp handles.

SETTING UP THE BRAKE

When your brake was assembled at the factory it was leveled, adjusted and tested for proper operation. Due to handling and repositioning the brake may require adjustment and alignment.
The brake was adjusted and tested at the factory for bending material at its rated capacity. Adjusted in this manner, the base of the brake is slightly crowned in the center. With the handles pulled forward, viewing through the center of the brake from the rear of the machine will allow you to observe the crown. An equal amount of light should be seen on either end of the brake with the center of the hold down (1) assembly touching the crowned clamp base (29). If one end has less light, the brake is not level and you should shim under the rear of the leg at that end until the amount of light is equal.
In bending lighter gauge material, the crown in the clamp base (29) may cause over bending in the center of the work piece. If this is the case, back off the center truss nut on the base and apron assemblies proportionately to reduce the crown.

The apron assembly (35) has four different areas of adjustment:

1. **Truss nut:** The large nut at the bottom center of the apron raises and lowers the raises and lowers the center of the apron.
2. **Apron adjusting screw and lock nut:** These screws and nuts (58, 59), located at the bottom of apron. The hinge mounting screws must be loosened prior to making this adjustment and retightened afterwards.

3. **Apron hinge shim:** These shims (56), located between the apron hinges and apron assembly, adjust the gap between the apron (35) and the clamp block on the base (29) at the ends of the apron. Adding shim material closes the gap. Reducing shim material opens the gap. The hinge mounting screws hold the shim(s) in place.
4. **Straitening bolt and nut:** These bolts and nuts (37, 38), located near the lifting handles on the apron assembly, adjust the gap between the apron and the clamp block on the base at the center of the apron. Tightening the bolts stiffens the apron thus closing the gap. Loosening the bolts opens the gap.

The apron assembly is adjusted at the factory to form material to the brake's rated capacity. No further adjustments to the apron should be required upon initial installation. However, due to potential shifting during transit, you should visually confirm that the upper edge of the apron is flush to 1/64 low in the center and 1/64 to 1/32 low on the ends with the clamp block on the base (29). Additionally, the gap between the apron and the clamp block should not exceed .012 inches. Follow the steps in the preceding paragraph to make any necessary adjustment.
The forward edge of the nose bar or hold down insert (21) should be adjusted parallel to the pivot edge of the clamp block along the entire length of the brake. Release any clamping pressure on the hold down assembly (1) by pushing the clamp handles slightly to the rear. Turn the hold down adjusting knobs (15) at each end of the hold down assembly to move the forward edge of the clamp block. The central portion of the hold down assembly can be adjusted forward or backward by tightening or loosening the truss nut on the top "center" of the hold down assembly.

OPERATING THE BRAKE

ADJUSTING FOR METAL THICKNESS: The hold down assembly (1) must be adjusted to allow for clearance of the bend material according to the thickness of the material being worked. This adjustment is made by slightly releasing the clamping pressure and moving the forward edge of the nose bar or hold down insert back, away from the edge of the clamp block on the base. **To adjust for clearance, turn the hold down adjusting knobs (15) at each end of the hold down assembly to move the forward edge of the clamp block.** For material within four gauges of capacity, the clearance should equal twice the thickness of the material being worked. For lighter gauges, allow a clearance equal to one and one half times the thickness of the material. A larger bend radius can be accomplished by increasing the clearance.

ADJUSTING THE CLAMPING PRESURE: The clamping pressure should be adjusted according to the thickness of the material being worked. A common cause of forming problems is the result of either **inadequate** or **excessive** clamping pressure. Too much clamping pressure on one or both handles typically will result in over bending the material on that particular end or relative to the center portion of the brake. Not enough clamping pressure force will allow the material to slip during the bending process and result in an under bent section. This under bending is often encountered in the center of the brake.

Clamping pressure should be enough to hold the material securely in place but not so great as to require undue effort in locking the clamp handles. Clamping pressure on the ends of the brake is adjusted by turning the nuts (24) on the threaded rod portion of the yoke assembly (23) which is below the clamp swivel (36). To set the clamping pressure in the center of the brake, use a 3-Inch in width scrap piece of material of the same thickness to be worked. Place and clamp the blank in the center of the brake. The clamping pressure should be equivalent to the pressure which was set at either end of the machine. If the material is not securely clamped, move to the rear of the brake and locate the tensioning bracket found the upper left hand side of the hold down (1) assembly. Tightening the nut on the end of the tension rod will pull the center of the hold down towards the clamp block of the base (29) and thus tighten the clamping pressure in the center of the brake. When clamping pressure is properly adjusted, lock the nuts (24) on the yoke assembly (23) together to prevent any change in adjustment.

Note: The lock nuts on the top of the clamp swivel should be backed off the clamp swivel (36) approximately ¼ turn and locked in place. Tightening the top jam nuts directly on the clamp swivel (36) will make the handles more difficult to move and encourage binding. Binding of the yoke assembly could cause the threaded rod assembly to break.

CAPACITY: Depending on the brake model, the capacity of the brake with the apron support angle (41) attached is 12, 14, 16 or 18 gauge mild steel. The stainless steel equivalent is 16, 18, 20 and 22 gauge respectively. The minimum recommended flange in capacity material with the apron support angle in place is one inch. The capacity of the brake is reduced by four gauges when the apron support angle is removed: i.e. 16 gauge capacity becomes 20 gauge capacity. The capacity of the brake is reduced by seven gauge when the apron insert (39) is removed.

BENDING REPEAT BENDS: Bending is accomplished by clamping the work piece under the hold down assembly (1) so that the line of the bend is held at the forward edge of the nose bar (21) and by elevating the apron assembly (35) until the desired degree of bend is obtained. The maximum degree of bend is approximately 135 degrees. Due to the "spring back" in various materials some over bending maybe required to get the desired bend angle. For repeat bends, adjust the stop (60) on the stop rod (26) to limit the swing of the apron assembly (35).

COUNTERWEIGHT ADJUSTMENT:

CAUTION: The counterweights (5) on your brake weigh from 30 to 110 pounds each, depending on the model. Ajustment is a two person job and can be best made with the apron blocked in a horizontal position. The counterweights can be moved up and down the counterweight bars (6) to provide more or less leverage depending on the gauge of the material being worked. Secure the counterweights at the desired location by means of the counterweight lock screws. Keep the counterweights evenly adjusted to equally distribute the leverage on both ends of the apron assembly. Normally, the weights are positioned in line with the pivot point of the clamp block. Properly counterbalanced, the apron will move easily to the horizontal position and also will fall and remain in the vertical n use.

HEMMING:

Note: Forming hems is a secondary operation for a hand brake. If you adjust the brake to close a hem in the center of the work piece, the brake most likely will not bend straight. A hem is formed by making an acute (reverse) bend in the work piece and then clamping the bent flange in the hold down (1) to press the flange closed (to 180 degrees). Often the hem will not fully close in the center of a long work piece due to fact that the outer ends of the brake are more rigid than the center. Here it is especially important that the brake is sufficiently crowned and that there is proper clamping pressure at the center of the brake. Also the situation can be improved by inserting a strip of material (of the same thickness as the work piece) between the work piece and the clamp block slightly longer than the open portion of the hem. Re-clamp the hold down to close the hem. A tinner's mallet or hammer is also useful for closing hems. Be cautious not to use excessive force on the clamp handles to close the hem.
Note: The lock nuts on the top of the clamp swivel should be backed off the clamp swivel (36) approximately ¼ turn and locked in place. Tightening the top jam nuts directly on the clamp swivel (36) will make the handles more difficult to move and encourage binding. Binding of the yoke assembly could cause the threaded rod assembly to break.

CREEPING HOLD DOWN ADJUSTMENT: The term creeping hold down refers to the problem of the hold down assembly shifting forward when the clamp handles are locked into place. A common misconception is that tightening the pivot lock screws (11) is the required adjustment. However, the function of the pivot lock screw is to lock a setting in place prior to numerous bends of a particular gauge. Tightening the pivot lock screw has no effect on the hold down backlash.

A creeping hold down is usually caused by backlash in the hold down adjusting screw assembly (12). The loose motion is the result of the hold down adjusting screw collar (13) having backed off allowing play between the thrust bearing (64) and the base endplate. To adjust, insert an allen wrench in the set screw (14) of the collar and hold the collar stationary while tightening the adjustment screw. This will take out the backlash and sea the bearings against the milled slot in the base endplate. Tighten the set screw to lock the collar in its proper position.

Another possible source of movement is loose pivot bracket screws (8). Check to be sure that the pivot bracket screws are securing the hold down pivot brackets (9) tightly against the side frames of the hold down assembly. If the creeping continues, the unit is probably not level. Elevate the rear of the leg by using the leveling screw and nut at the end that creeps until the creeping stops. Use shims if necessary and retighten the bolt or lag screw that holds the brake to the floor.

PRECAUTIONS

DO NOT USE THE BRAKE TO BEND RODS, NAILS OR WIRE. THIS WILL CAUSE DAMAGE TO THE EDGE OF THE NOSE BAR AND APRON.

ALWAYS ADJUST THE CLEARANCE AND CLAMPING PRESSURE FOR DIFFERENT THICKNESSES OF MATERIAL.

DO NOT EXCEED THE CAPACITY OF THE BRAKE. MAKE CERTAIN THAT APRON SUPPORT ANGLE AND APRON INSERT IS ATTACHED TO THE APRON ASSEMBLY WHEN MAKING CAPACITY BENDS. OTHERWISE PERMANENT DAMAGE TO THE APRON MAY RESULT.

DO NOT USE PIPE EXTENSIONS TO GAIN ADDITIONAL LEVERAGE ON THE CLAMP HANDLES.

ALWAYS USE MATERIAL WITH SQUARE SHEARED EDGES FOR BEST RESULTS. ROLLED EDGES, BENT OR WARPED MATERIAL WILL CUASE THE MATERIAL TO BOW WHEN BENT. KEEP SHEAR BLADES AND SLITTER KNIVES SHARP.

ALWAYS BEND SHORT PIECES OF MATERIAL IN THE CENTER OF THE BRAKE IN ORDER TO EQUALIZE THE STRESS.

MAINTENANCE

Set up a weekly maintenance program for your brake. Check all nuts, bolts and set screws for tightness. Examine all moving parts for adequate lubrication.

The moving parts of the brake should be lubricated periodically and as necessary to maintain ease of operation and prolong the life of your brake. The clamp handles, yokes and hinges should be greased with MOBIL GREASE HP or an equivalent grade of lubricating grease at the designated fittings. The hold down pivot pins, hold down adjusting screws and clamp swivels should be kept lightly grease as well.

TROUBLESHOOTING

OVERBENDING ON ONE END

1. Excessive clamping pressure.
2. Nose bar adjusted too close to pivot point on that end.

UNDER BENDING IN THE CENTER

1. Insufficient crown in base / apron.
2. Insufficient clamping pressure at the center of the brake.
3. Apron straightening bolt (37) is loose.
4. Exceeding capacity of the brake.

APRON HARD TO LIFT

1. The brake is not level.
2. The counterweights are not properly adjusted.
3. The apron stop rod is binding. Insure rod is not bent and apply lubrication.

APRON MAKES CLICKING SOUND

1. Too much crown in base / apron. Adjust truss nuts to reduce.

NOSEBAR INDENTATIONS

1. Locks and seams are being bent without providing proper hold down clearance.
2. Locks and seams are being clamped with excessive hold down pressure.
3. Material formed has rough plasma cut edge.

HOLD DOWN SHIFTS TO ONE SIDE

1. Improper spacing of the clamp swivel washers (51).

HANDLE WORKS LOOSE OFTEN

1. Handle pin (18) has backed off. Remove handle and realign milled slot of pin with set screw position (17) and lock in place.

HANDLES ARE HARD TO MOVE

1. The brake is not level.
2. The lock nuts (20) are too tight.
3. Insufficient lubrication.
4. The top jam nuts (24) of the yoke assembly are locked against the clamp swivel (36). Back off ¼ turn and retighten.
5. Hold down gas shifted to one side. Check clamp swivel washer (51) spacing.

WILL NOT CLOSE HEM

1. See **HEMMING** section of manual.
2. Insufficient crown in base / apron.
3. Insufficient clamping pressure in center of the brake.

BOWED WORKPIECE

1. Excessive crown in base / apron.
2. Material cut on a slitter.
3. The brake is not level.

ORDERING PARTS

When ordering parts please furnish both the model and serial number of your machine

HB Series Floor Brake Parts Breakdown

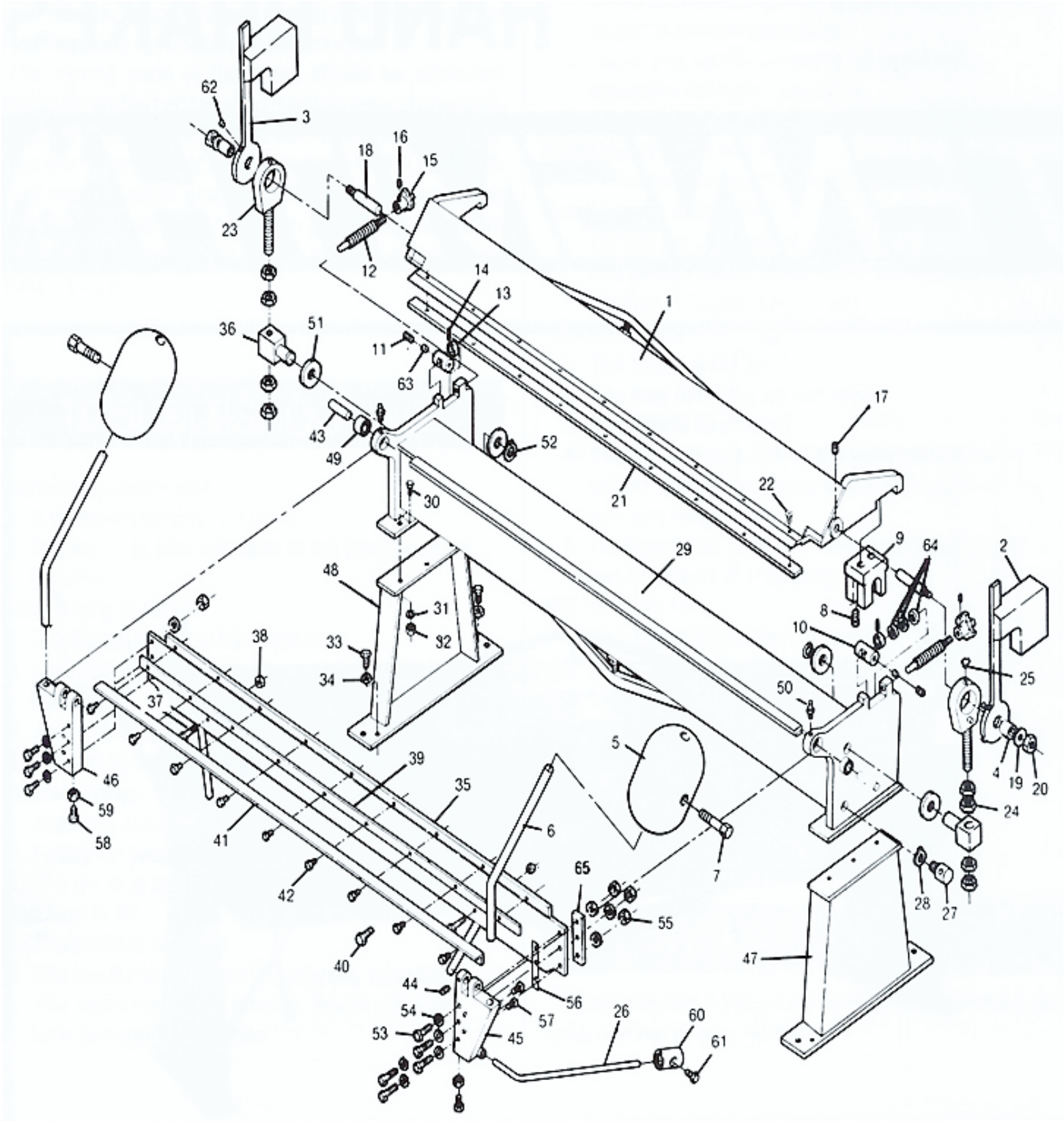

TEN AND TWELVE FOOT MODELS/PARTS LIST

INDEX NO.	DESCRIPTION	HB121-18	HB121-16	QTY. REQ.
1	HOLDDOWN ASSEMBLY	26901	27001	1
2	RIGHT HAND CLAMP HANDLE	25502	27002	1
3	LEFT HAND CLAMP HANDLE	25503	27003	1
4	BUSHING, CLAMP HANDLE	25104	27004	2
5	COUNTERWEIGHT	26905	27005	2
6	BAR, COUNTERWEIGHT	25606	25606	2
7	SCREW, COUNTERWEIGHT LOCK	05340	05270	2
8	SCREW, PIVOT BRKT.	05166	05166	4
9	PIVOT BRKT., HOLDDOWN	25109	27009	2
10	PIVOT PIN, HOLDDOWN	25110	27010	2
11	SCREW, PIVOT LOCK	05334	05334	2
12	SCREW, HOLDDOWN ADJ.	25112	27012	2
13	COLLAR, HOLDDOWN ADJ. SCREW	25113	27013	2
14	SCREW, NUT LOCK	05311	05311	2
15	HANDKNOB, HOLDDOWN ADJ.	25015	25015	2
16	SCREW, HANDKNOB LOCK	05307	05307	2
17	SCREW, PIN LOCK	05328	05328	2
18	PIN, HANDLE	25118	27018	2
19	WASHER, PIN	05679	05679	2
20	LOCK NUT/SPRING CAP ASS'Y.	05883	27070	2
21	INSERT, HOLDDOWN	25621	25621	1
22	SCREW, INSERT	05097	05097	21
23	YOKE ASSEMBLY	25123	27023	2
24	NUT, YOKE	05835	05835	8
25	GREASE FITTING, YOKE	06200	06200	2
26	STOP ROD	25026	25026	1
27	SWIVEL, STOP ROD	25027	25027	1
28	RETAINER RING, SWIVEL	06273	06273	2
29	BASE ASSEMBLY	26929	27029	1
30	SCREW, LEG	05055	05055	6
31	WASHER, LEG SCREW	05645	05645	6
32	NUT, LEG SCREW	05765	05765	6
33	LEVEL SCREW	05261	05261	4
34	NUT, LEVEL SCREW	05765	05765	4
35	APRON ASSEMBLY	26935	27035	1
36	CLAMP SWIVEL	25136	27036	2
37	BOLT, STRAIGHTENER	05042	05043	2
38	NUT, BOLT	05820	05820	2
39	INSERT, APRON	25639	25639	1
40	SCREW, ANGLE SUPPORT	05045	05045	11
41	ANGLE SUPPORT, APRON	25641	25641	1
42	SCREW, INSERT	05096	05096	21
43	PIN, HINGE	25143	27043	2
44	SCREW, PIN LOCK	05313	05328	2
45	RIGHT HAND HINGE ASSEMBLY	26945	27045	1
46	LEFT HAND HINGE ASSEMBLY	26946	27046	1
47	RIGHT HAND LEG ASSEMBLY	25647	25647	1
48	LEFT HAND LEG ASSEMBLY	25647	25647	1
49	BEARING, HINGE PIN	25149	27049	2
50	GREASE FITTING	06200	06200	2
51	WASHER, CLAMP SWIVEL	05688	05691	2
52	RETAINER RING, SWIVEL	06276	06278	2
53	SCREW, HINGE MTG.	05054	05054	7/9
54	WASHER, HINGE MTG. SCREW	05645	05645	7/9
55	NUT, HINGE MTG. SCREW	05823	05828	7/9
56	SHIM, HINGE	25556	27056	4
57	SCREW, COUNTERWEIGHT BAR LOCK	05255	05264	4
58	SCREW, APRON ADJ.	05258	05267	2
59	LOCK NUT, APRON ADJ. SCREW	05823	05826	2
60	STOP	25060	25060	1
61	SCREW, STOP LOCK	05252	05252	1
62	GREASE FITTING, HANDLE	06200	06200	2
63	NYLON PLUG, PIVOT PIN	25063	25063	2
64	THRUST BEARING	25164	27064	2
65	BRKT., HINGE MTG.	25565	27065	2

EIGHT AND SIX FOOT MODELS/PARTS LIST

INDEX NO.	DESCRIPTION	HB97-18	HB97-16	QTY. REQ.
1	HOLDDOWN ASSEMBLY	26701	26801	1
2	RIGHT HAND CLAMP HANDLE	25202	25502	1
3	LEFT HAND CLAMP HANDLE	25203	25503	1
4	BUSHING, CLAMP HANDLE	25104	25104	2
5	COUNTERWEIGHT	26705	26805	2
6	BAR, COUNTERWEIGHT	25406	25406	2
7	SCREW, COUNTERWEIGHT LOCK	05335	05340	2
8	SCREW, PIVOT BRKT.	05166	05166	4
9	PIVOT BRKT., HOLDDOWN	25109	25109	2
10	PIVOT PIN, HOLDDOWN	25110	25110	2
11	SCREW, PIVOT LOCK	05334	05334	2
12	SCREW, HOLDDOWN ADJ.	25112	25112	2
13	COLLAR, HOLDDOWN ADJ. SCREW	25113	25113	2
14	SCREW, NUT LOCK	05311	05311	2
15	HANDKNOB, HOLDDOWN ADJ.	25015	25015	2
16	SCREW, HANDKNOB LOCK	05307	05307	2
17	SCREW, PIN LOCK	05328	05328	2
18	PIN, HANDLE	25118	25118	2
19	WASHER, PIN	05679	05679	2
20	LOCK NUT.	05883	05883	2
21	INSERT, HOLDDOWN	25421	25421	1
22	SCREW, INSERT	05097	05097	9
23	YOKE ASSEMBLY	25123	25123	2
24	NUT, YOKE	05835	05835	8
25	GREASE FITTING, YOKE	06200	06200	2
26	STOP ROD	25026	25026	1
27	SWIVEL, STOP ROD	25027	25027	1
28	RETAINER RING, SWIVEL	06273	06273	2
29	BASE ASSEMBLY	26729	26829	1
30	SCREW, LEG	05055	05055	6
31	WASHER, LEG SCREW	05645	05645	6
32	NUT, LEG SCREW	05765	05765	6
33	LEVEL SCREW	05261	05261	4
34	NUT, LEVEL SCREW	05765	05765	4
35	APRON ASSEMBLY	26735	26835	1
36	CLAMP SWIVEL	25136	25136	2
37	BOLT, STRAIGHTENER	05042	05042	2
38	NUT, BOLT	05820	05820	2
39	INSERT, APRON	25439	25439	1
40	SCREW, ANGLE SUPPORT	05045	05045	9
41	ANGLE SUPPORT, APRON	26741	26841	1
42	SCREW, INSERT	05096	05096	17
43	PIN, HINGE	25143	25143	2
44	SCREW, PIN LOCK	05313	05313	2
45	RIGHT HAND HINGE ASSEMBLY	25245	26845	1
46	LEFT HAND HINGE ASSEMBLY	25246	26846	1
47	RIGHT HAND LEG ASSEMBLY	25247	25247	1
48	LEFT HAND LEG ASSEMBLY	25247	25247	1
49	BEARING, HINGE PIN	25149	25149	2
50	GREASE FITTING	06200	06200	2
51	WASHER, CLAMP SWIVEL	05688	05688	2
52	RETAINER RING, SWIVEL	06276	06276	2
53	SCREW, HINGE MTG.	05054	05054	5/7
54	WASHER, HINGE MTG. SCREW	05645	05645	5/7
55	NUT, HINGE MTG. SCREW	05823	05828	5/7
56	SHIM, HINGE	25256	25556	4
57	SCREW, COUNTERWEIGHT BAR LOCK	05255	05255	4
58	SCREW, APRON ADJ.	05258	05258	2
59	LOCK NUT, APRON ADJ. SCREW	05823	05823	2
60	STOP	25060	25060	1
61	SCREW, STOP LOCK	05252	05252	1
62	GREASE FITTING, HANDLE	06200	06200	2
63	NYLON PLUG, PIVOT PIN	25063	25063	2
64	THRUST BEARING	25164	25164	2
65	BRKT., HINGE MTG.	25565	25565	2

HB Floor Model Bending Brakes Specification

Models	HB73-16	HB97-18	HB97-16	HB97-12
Capacity, mild steel	16ga / 1,6mm	18ga / 1,25mm	16ga / 1,6mm	12ga / 2,7mm
Capacity with bending support angle removed , mild steel	20ga / 1,0mm	22ga / 0,76mm	20ga / 1,0mm	16ga / 1,6mm
Bending length	73in / 1854mm	97in / 2464mm	97in / 2464mm	97in / 2464mm
Maximum lift of beam	1-7/8in / 47mm	1-7/8in / 47mm	1-7/8in / 47mm	2-1/4in / 57mm
Front to rear adjustment	1/2in / 13mm	1/2in / 13mm	1/2in / 13mm	1/2in / 13mm
Minimum reverse bend	1/4in / 6mm	1/4in / 6mm	1/4in / 6mm	1/4in / 6mm
Minimum flange in capacity material	1in / 25mm	1in / 25mm	1in / 25mm	1in / 25mm
Dimensions, counterweights in place, LxWxH	114 x 48 x 59-1/2in 2896 x 1220 x 1512mm	138 x 48 x 59-1/2in 3506 x 1220 x 1512mm	140 x 52 x 60in 3556 x 1321 x 1524mm	145 x 54 x 63-1/2in 3683 x 1372 x 1613mm
Weight	1,200 lbs / 545 kg	1385 lbs / 628 kg	1,675 lbs / 760 kg	2800 lbs / 1273 kg

Models	HB121-18	HB121-16	HB121-14	HB145-18
Capacity, mild steel	18ga / 1,25mm	16ga / 1,6mm	14ga / 2,0mm	18ga / 1,25mm
Capacity with bending support angle removed , mild steel	22ga / 0,76mm	20ga / 1,0mm	18ga / 1,25mm	22ga / 0,76mm
Bending length	121in / 3073mm	121in / 3073mm	121in / 3073mm	145in / 3683mm
Maximum lift of beam	2-1/4in / 57mm	2-1/4in / 57mm	2-1/4in / 57mm	2-1/4in / 57mm
Front to rear adjustment	1/2in / 13mm	1/2in / 13mm	1/2in / 13mm	1/2in / 13mm
Minimum reverse bend	1/4in / 6mm	1/4in / 6mm	1/4in / 6mm	1/4in / 6mm
Minimum flange in capacity material	1in / 25mm	1in / 25mm	1in / 25mm	1in / 25mm
Dimensions, counterweights in place, LxWxH	159 x 52 x 60in 4039 x 1321 x 1512mm	161 x 53 x 60in 4090 x 1347 x 1512mm	162 x 54 x 63-1/2in 4115 x 1372 x 1613mm	185 x 53 x 60in 4700 x 1347 x 1512mm
Weight	2,300 lbs / 1043 kg	2875 lbs / 1304 kg	3250 lbs / 1477 kg	3400 lbs / 1545 kg

THREE YEAR 3 LIMITED FACTORY WARRANTY

USA MADE

Tennsmith Inc. / 6926 Smithville Hwy. / McMinnville, TN 37110 / 931-934-2211 / Fax 931-934-2220

www.tennsmith.com